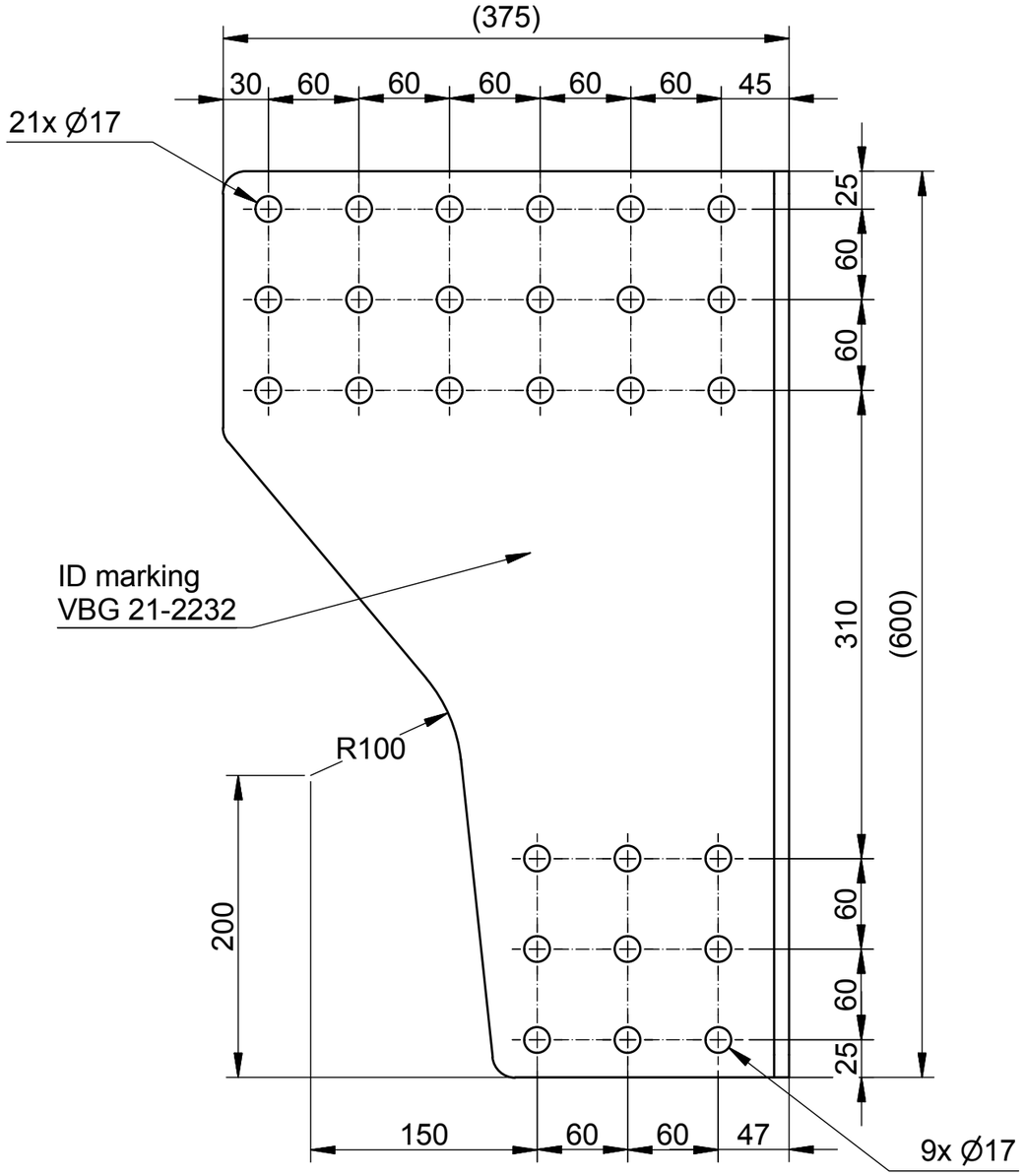

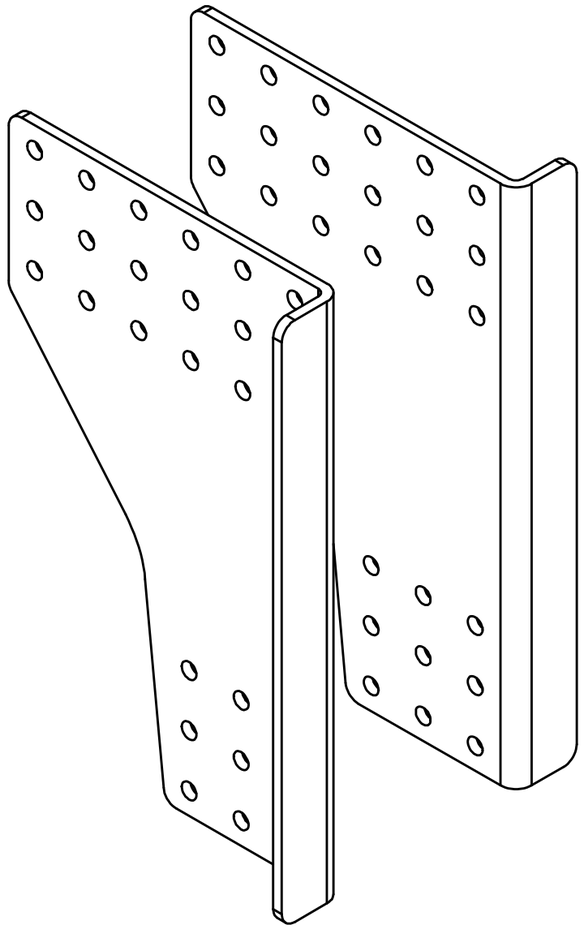

2 Measure for information only

1 For type approval see DB 75V-2

VBG GROUP	Modified Date 2018-02-07	Modified by PR	Modification No. 13048	Issue b
	3D Model No. 21-223200			Engineer SJ
Description Set of EDL-2 DAF	Sheet Size A3	Scale 1 : 4	Projection	Drafting Date 2013-06-18 / Drafted by RJ
	Stage P	Drawing No. 21-223200 (F) INFO		

This drawing is the property of VBG Group AB and is protected in accordence with prevailing law. Changes must be made in CAD-program, this concerns both 2D & 3D.

Released